RE 10534
Edition: 2025-06

rexroth
A Bosch Company

Adjustable vane pump, pilot operated

Type PV7-AX...C

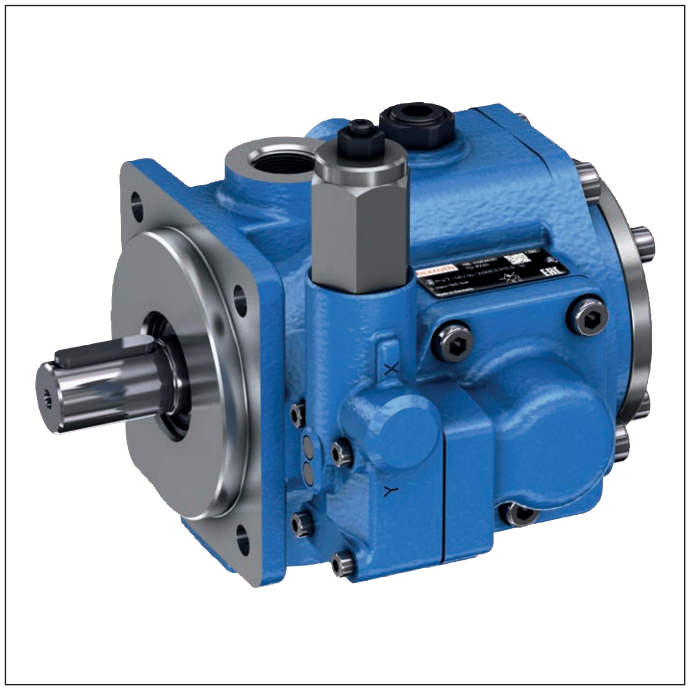

- Component series AX
- Size 14 ... 45
- Maximum operating pressure 160 bar
- Maximum flow 80 l/min

Features

- Variable displacement
- Low operating noise
- Extended bearing life cycle thanks to hydrodynamically lubricated plain bearings
- Pressure and flow can be controlled
- Low hysteresis
- Very low control up times and down control times
- Mounting dimensions according to ISO 3019-2
- Connection dimensions according to ISO 228-1
- Suitable for HLP, HETG, HEES and HFD-U hydraulic fluids
- Standard Series PV7 single pumps can be combined with multiple pumps as well as internal gear, external gear, axial piston and radial piston pumps
- Used for drives in continuous operation with variable flow requirement and a high share in the pressure holding function, e.g. machine tools, hydrostatic bearings, Constant pressure systems

Contents

Features	1
Ordering code	2 ... 5
Function, section, symbols	6, 7
Technical data	8
Characteristic curves	9 ... 11
Dimensions	12 ... 18
Connections	12
Dynamic pressure control characteristics	19
Controller	20
Project planning information	21, 22
Installation information	23
Commissioning information	24
Further information	24

Ordering code: Single pumps

01	02	03	04	05	06	07	08	09	10	11	12
PV7	**–**	**AX**	**/**		**R**	**E**	**01**	**M**	**C**	**0**	**–**			*****

01	Vane pump, variable, pilot operated	**PV7**
02	Component series A0 ... A9 (A0 ... A9: unchanged installation and mounting dimensions)	**AX**
03	**Frame size 10**	
	Size 14 (displacement 14 cm³)	**10-14**
	Size 20 (displacement 20 cm³)	**10-20**
	Frame size 16	
	Size 20 (displacement 20 cm³)	**16-20**
	Size 30 (displacement 30 cm³)	**16-30**
	Frame size 25	
	Size 30 (displacement 30 cm³)	**25-30**
	Size 45 (displacement 45 cm³)	**25-45**

Direction of rotation

04	When looking at the drive shaft, right	**R**

Drive shaft

05	Cylindrical shaft with fitting key according to ISO 3019-2	**E**

Line connections

06	Suction and pressure port with pipe thread according to ISO 228-1	**01**

Seal material (observe compatibility of seals with hydraulic fluid used, see page 8)

07	NBR seals	**M**

Controller type

08	Pressure controller	**C**

Controller option

09	Standard	**0**

Zero stroke pressure range

10	**Size 14**	
	20 ... 160 bar	**16**
	Size 20	
	20 ... 100 bar	**10**
	20 ... 160 bar	**16**
	Size 30	
	20 ... 80 bar	**08**
	20 ... 160 bar	**16**
	Size 45	
	20 ... 80 bar	**08**
11	Further details in the plain text	

Ordering code

Preferred types (available for immediate delivery)

Type	Material number
PV7-AX/10-14RE01MC0-16	R901592200
PV7-AX/10-20RE01MC0-10	R901592201
PV7-AX/16-20RE01MC0-16	R901592202
PV7-AX/16-30RE01MC0-08	R901592203
PV7-AX/25-30RE01MC0-16	R901592204
PV7-AX/25-45RE01MC0-08	R901592205

☞ **Notice:**
- The preferred types are noise-optimized at maximum operating pressure and the zero stroke pressure is set to 30 bar.
- Pumps with customer-specific settings are noise-optimized at the desired operating points ($p_{zero\ stroke}$/q_{Vmax}).

Example: Pump with customer-specific setting
- PV7-AX/16-20RE01MC0-16-P50, $p_{zero\ stroke}$ = 50 bar
- PV7-AX/16-20RE01MC0-16-Q25, q_{Vmax} = 25 l/min
- PV7-AX/16-20RE01MC0-16-P70Q20, $p_{zero\ stroke}$ = 70 bar, q_{Vmax} = 20 l/min

Ordering code: Pump combination

01	02	03		04	05	06		07	08		09	10	11	12	13		14	15	16	17
P2	**V7**	**–**	**AX**	**/**		**C**	**0**	**+**			**/**			**R**	**E**	**01**	**+**			**E4**	*****

01	2-fold	**P2**

02	Vane pump, variable, pilot operated	**V7**

Pump 1 [1)]

03	Component series A0 ... A9 (A0 ... A9: unchanged installation and mounting dimensions)	**AX**

Pump 1 [1)]

04	**Frame size 10**	
	Size 14 (displacement 14 cm³)	**10-14**
	Size 20 (displacement 20 cm³)	**10-20**
	Frame size 16	
	Size 20 (displacement 20 cm³)	**16-20**
	Size 30 (displacement 30 cm³)	**16-30**
	Frame size 25	
	Size 30 (displacement 30 cm³)	**25-30**
	Size 45 (displacement 45 cm³)	**25-45**

Pump 1 [1)]

05	Pressure controller	**C**

Controller option

06	Standard	**0**

Pump 2 [2)]

07	Pump typ (e.g. V7)	e.g. **PV7**

Pump 2 [2)]

08	Component series (e.g. AX; if required)	e.g. **AX**

Pump 2 [2)]

09	Size (e.g. 16-20)	e.g. **16-20**

Pump 2 [2)]

10	Pressure controller (e.g. C0; if required)	e.g. **C0**

Direction of rotation

11	When looking at the drive shaft, right	**R**

Pump 1 [1)] **– Drive shaft**

12	Cylindrical shaft with fitting key according to ISO 3019-2	**E**

Pump 1 [1)] **– Line connections**

13	Suction and pressure port with pipe thread according to ISO 228-1	**01**

Pump 2 [2)] **– Drive shaft**

14	e.g. J	e.g. **J**

Pump 2 [2)] **– Line connections**

15	e.g. 07	e.g. **07**

Ordering code: Pump combination

01	02	03		04	05	06		07	08		09	10	11	12	13		14	15	16	17
P2	**V7**	**–**	**AX**	**/**		**C**	**0**	**+**			**/**			**R**	**E**	**01**	**+**			**E4**	*****

Pump 1 [1] **– Mounting**

16	4-hole mounting flange according to ISO 3019-2	**E4**
17	Further details in the plain text	

[1] Details see page 2.

[2] Details, see data sheet of the used pump (e.g. type PGH3-2X, data sheet 10223)

Order example

- P2V7-AX/25-30C0+V7-AX/25-30C0RE01+E01E4
- P2V7-AX/10-14C0+GF2/016RE01+J20E4
- P2V7-AX/10-14C0+GH3/013RE01+R07E4
- P2V7-AX/16-20C0+GZ4/032RE01+T07E4
- P2V7-AX/16-20C0+R4/1,00-450RE01+G01E4

Configuration possibilities

Pump 1	Pump 2	Combination kit Material number	Data sheet
PV7-AX/10-...	PV7-AX/06-...RA01M...	R900540811	10532
	PV7-AX/10-...RE01M...	R900540811	10534
	PGF1-2X/...RE01VU2	R900857584	10213
	PGF2-2X/...RJ...VU2	R900541209	10213
	PGH2-2X/...RR...VU2	R900541209	10223
	PGH3-2X/...RR...VU2	R900541209	10223
	AZPF...RR...MB	R900541209	10089
PV7-AX/16-...; PV7-AX/25-...;	PV7-AX/06-...RA01M...	R900540812	10532
	PV7-AX/10-...RE01M...	R900540812	10534
	PV7-AX/16-...RE01M...	R900540813	10534
	PV7-AX/20-...RA01M...	R900540813	10532
	PV7-AX/25-...RE01M...	R900540813	10534
	PGF1-2X/...RE01VU2	R900857585	10213
	PGF2-2X/...RJ...VU2	R900541210	10213
	PGH2-2X/...RR...VU2	R900541210	10223
	PGH3-2X/...RR...VU2	R900541210	10223
	PGZ4/5-1X/...RT...VU2	R901240641	10545
	AZPF...RR...MB	R900541210	10089
	PR4-1X/0.40...2.00-...WG...	R900541205	11260
	PR4-3X/1.60...20.00-...RA...	R900541207	11263

☞ **Notice:**
All pump combinations of type PV7-AX are sealed off from one another by the shaft seal ring of pump 2.
The seal function depends on the pressure relation. For stricter requirements on secure media separation, please contact us.

Function, section, symbols

Hydraulic pumps of type PV7...A are vane pumps with variable displacement.
They consist essentially of the housing (1), rotor (2), vanes (3), stator ring (4), pressure controller (5) and flow adjusting screw (6).
The annular stator ring (4) is fixed by the small floating stroking piston (10) and the large floating set piston (11). The ring is fixed at a third location by the height adjusting screw (7).
The driven rotor (2) rotates within the stator ring (4).
The vanes (3) are guided in the rotor (2) and are pressed against the inner running surface of the stator ring (4) by centrifugal force.

Suction and displacement procedure
The chambers (8) required for the transport of hydraulic fluid are formed by the vanes (3), the rotor (2), the stator ring (4), and the control plate (9).
To ensure pump function on commissioning, the stator ring (4) is held in its eccentric position (displacement position) by the spring (12) behind the large floating stroking piston (11).
The chamber volume (8) increases as the rotor (2) rotates and the chambers (8) are filled with hydraulic fluid through the suction channel S. When the greatest chamber volume is reached, the chambers (8) are separated from the suction side.
As the rotor (2) continues to rotate, the connection to the pressure side is opened, and the chambers decrease in size and force the hydraulic fluid into the system through the pressure channel P.

Adjustment
As pressure builds in the system, the back of the small floating stroking piston (10) is always pressurized through a channel.
In the flow position, the back of the large stroking piston (11) is also pressurized through a bore in the regulator spool (14). The large stroking piston (11), with the larger surface, holds the stator ring (4) in its eccentric position.
The pump displaces fluid at a pressure that is below the zero stroke pressure set on the pressure controller (5).
The regulator spool (14) is held in a certain position by the spring (13).

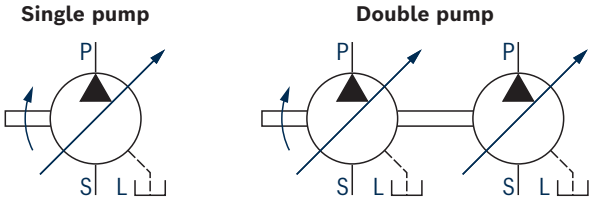

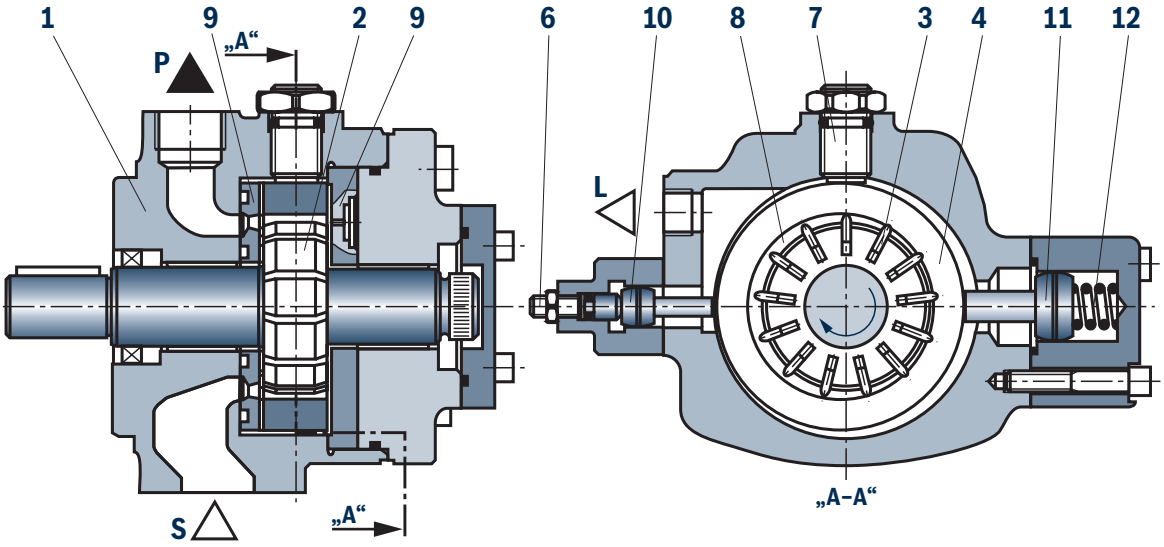

PV7-AX...

Pos 5, 13 and 14 see page 7.

Function, section

Pressure relief

If the force FP produced by pressure x area exceeds the counterforce FF of the spring, the regulator spool (14) is pushed against the spring (13). This connects the space behind the large floating stroking piston (11) to the tank, relieving pressure.

The small set piston (10), which is always under system pressure, moves the stator ring (4) to virtually the center position. The pump maintains pressure, flow returns to zero, leakages are replaced.

Power loss and fluid heating are minimal.

The characteristic curve q_V-p runs vertically and moves parallel to various high pressures that are set.

Pressure recovery

If the pressure in the system drops below the set zero stroke pressure, the spring (13) moves the regulator spool (14) back to its original position.

The large stroking piston (11) is pressurized and moves the stator ring (4) to its eccentric position. The pump continues to displace fluid.

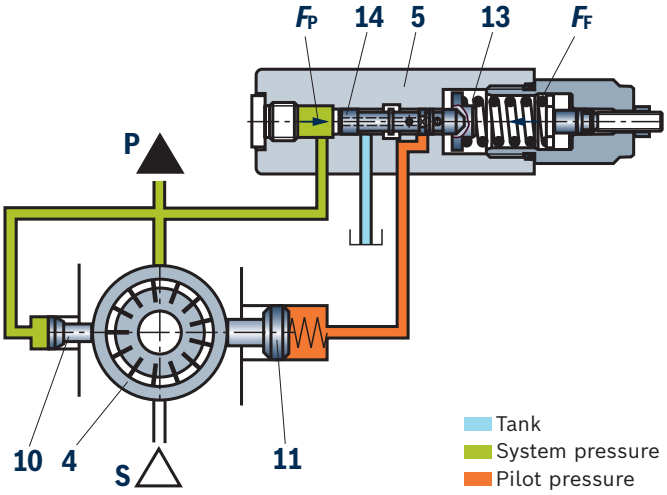

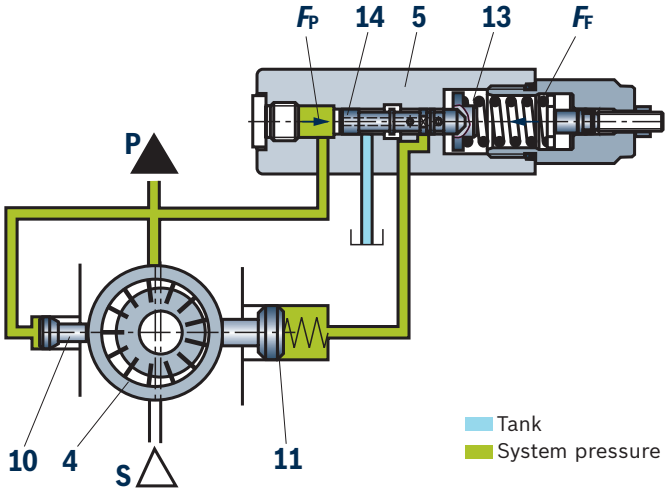

Technical data
(For applications outside these values, please consult us!)

General							
Frame size	BG	10	10	16	16	25	25
Size	NG	14	20	20	30	30	45
Pump design		Vane pump					
Type of mounting		Flange mounting					
Type of connection		Pipe thread					
Weight	kg	12.5	12.5	17	17	21	21
Installation position		Horizontal, suction port at the bottom or vertically					
Shaft load		Radial and axial forces cannot be absorbed					
Direction of rotation		right					
Minimum speed	rpm	900					
Maximum speed	rpm	1800					
Minimum drive power	kW	6.3	5.8	8.5	6.8	13.7	10.2
Maximum torque	Nm	90	90	140	140	180	180
Through-drive		Yes					
Maximum through-drive torque	Nm	45	45	70	70	90	90
Drive shaft		Cylindrical shaft with fitting key according to ISO 3019-2					
Flange		4-hole mounting flange according to ISO 3019-2					
Ambient temperature range	°C	–20 ... +60					
Surface protection		Painted, color blue (RAL 5010)					

Hydraulic							
Minimum suction pressure	bar	0.8					
Maximum suction pressure	bar	2.5					
Minimaler operating pressure	bar	20					
Maximum operating pressure	bar	160	100	160	80	160	80
Maximum pressure in the drain port	bar	2					
Druckflüssigkeit		see table below					
Hydraulic fluid temperature range	°C	–10 ... +70					
Viscosity range	mm^2/s	16 ... 160					
Maximum admissible degree of contamination of the hydraulic fluid; cleanliness class according to ISO 4406 (c)		Class 20/18/15 [1]					
Displacement (geometrical)	cm^3	14	20	20	30	30	45
Maximum flow	l/min	21	29	29	43.5	43.5	66
Maximum leakage	l/min	2.7	1.9	4	2.5	5.3	3.2
Change in flow	l/min	10	10	14	14	18	18
Change in pressure	bar	approx. 19 bar (From one turn of pressure adjusting screw, see page 7)					

Hydraulic fluid	Classification	Suitable sealing materials	Standards	Data sheet
Mineral oils	HL, HLP, HLPD, HVLP, HVLPD	NBR	DIN 51524	90220

☞ **Important information on hydraulic fluids:**

- For further information and application notes and application requirements for selecting hydraulic fluids, operational behavior, and disposal and environmental protection, see the data sheets above or on request.
- The hydraulic fluid should be selected so that the operating viscosity is in the optimum range in the operating temperature range (see viscosity-temperature diagram).
- **Additional hydraulic fluids upon request**

[1] The cleanliness classes specified for the components must be adhered to in hydraulic systems. Effective filtration prevents faults and at the same time increases the life cycle of the components.

Characteristic curves: "10-.."
(measured with n = 1450 rpm, v = 41 mm²/s, ϑ_{oil} = 50°C)

Zero stroke pressure range

Version „10-14“

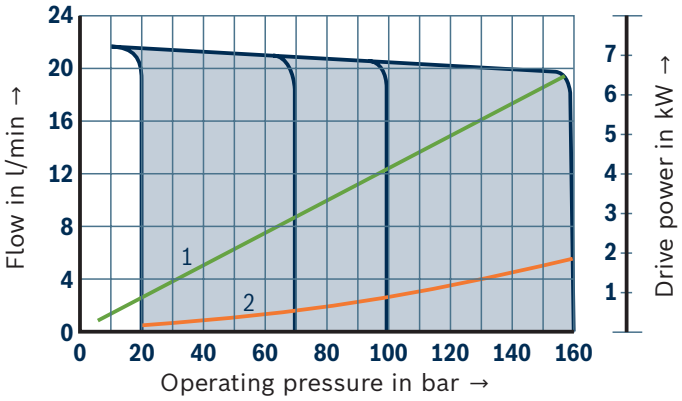

Version „10-20“

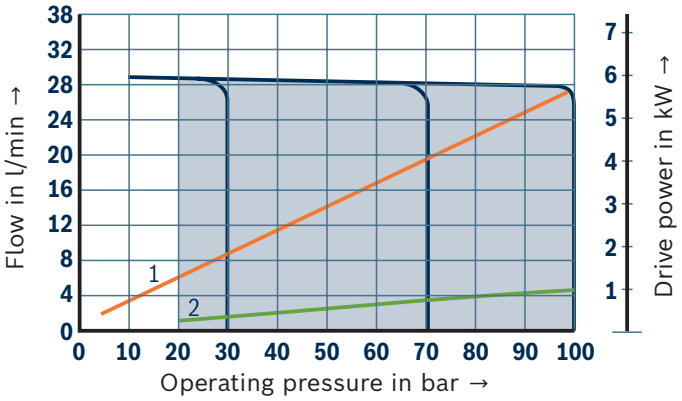

1 Displacement
2 Zero stroke

Sound pressure level

Version „10-14“

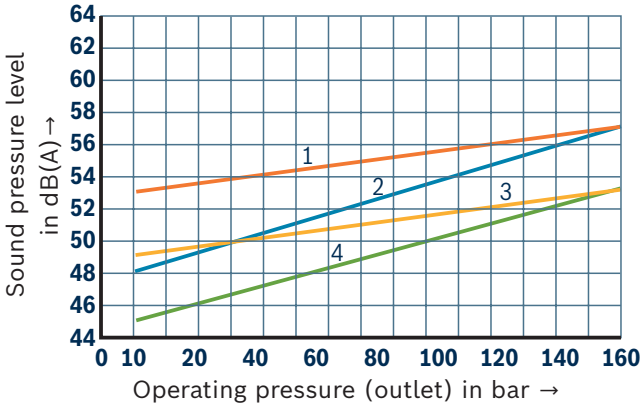

Version „10-20“

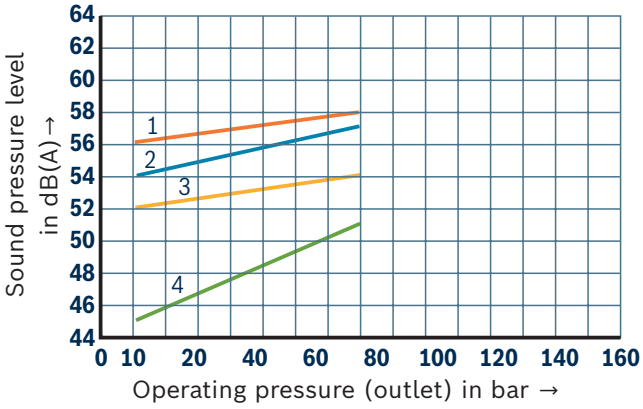

1 Displacement; 1450 rpm
2 Displacement; 900 rpm
3 Zero stroke; 1450 rpm
4 Zero stroke; 900 rpm

Notes:
- Sound pressure levels measured in acoustic room according to DIN 45635 Part 26; distance microphone – pump = 1 m
- The pump comes calibrated for optimal operating noise at the desired zero stroke pressure. If not specified, the pump comes optimized for the maximum achievable zero stroke pressure.

Characteristic curves: "16-.."
(measured with n = 1450 rpm, v = 41 mm²/s, ϑ_{oil} = 50°C)

Zero stroke pressure range

Version „16-20“

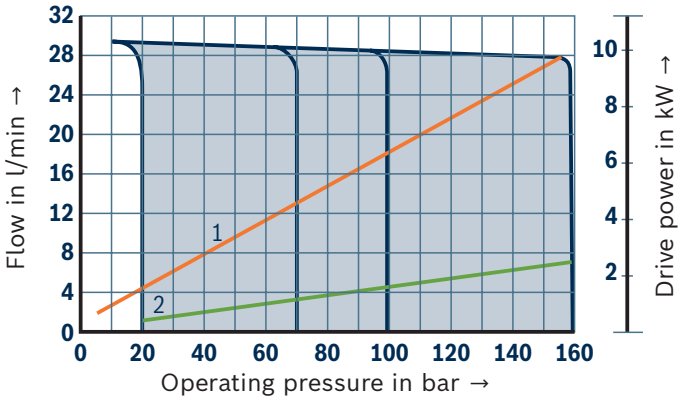

Version „16-30“

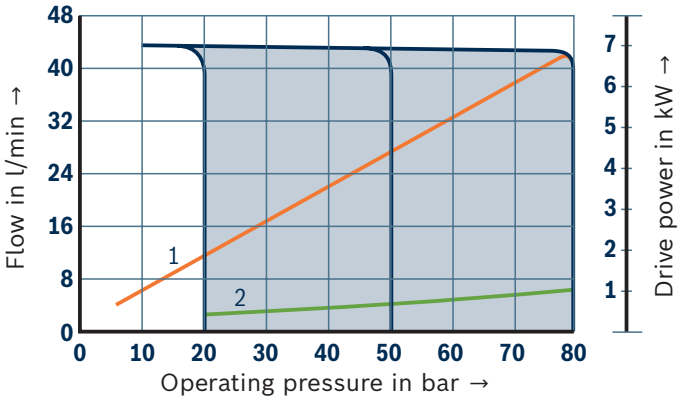

1 Displacement
2 Zero stroke

Sound pressure level

Version „16-20“

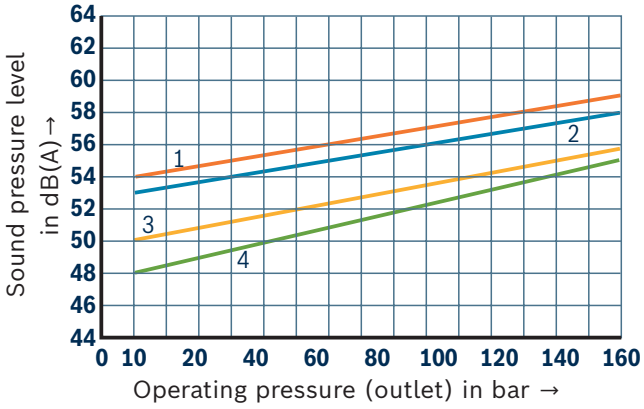

Version „16-30“

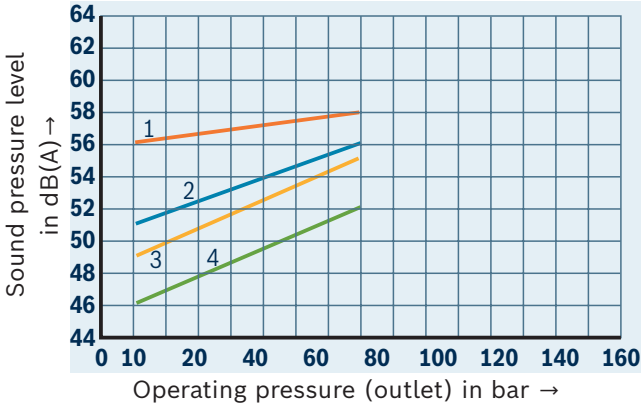

1 Displacement; 1450 rpm
2 Displacement; 900 rpm
3 Zero stroke; 1450 rpm
4 Zero stroke; 900 rpm

Notes:
- Sound pressure levels measured in acoustic room according to DIN 45635 Part 26; distance microphone – pump = 1 m
- The pump comes calibrated for optimal operating noise at the desired zero stroke pressure. If not specified, the pump comes optimized for the maximum achievable zero stroke pressure.

Characteristic curves: "25-.."
(measured with ***n*** = 1450 rpm, ***v*** = 41 mm²/s, ϑ_{oil} = 50°C)

Zero stroke pressure range

Version „25-30“

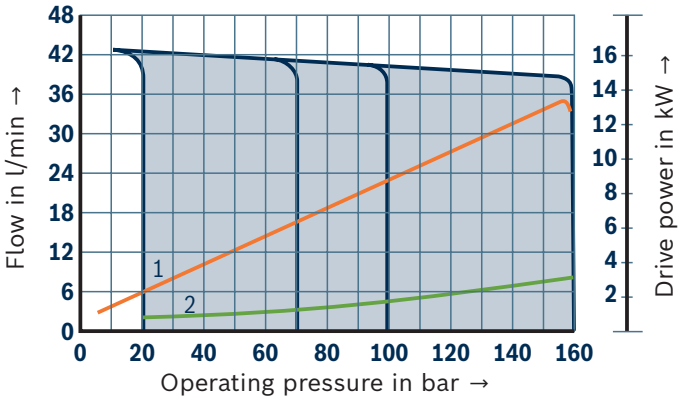

Version „25-45“

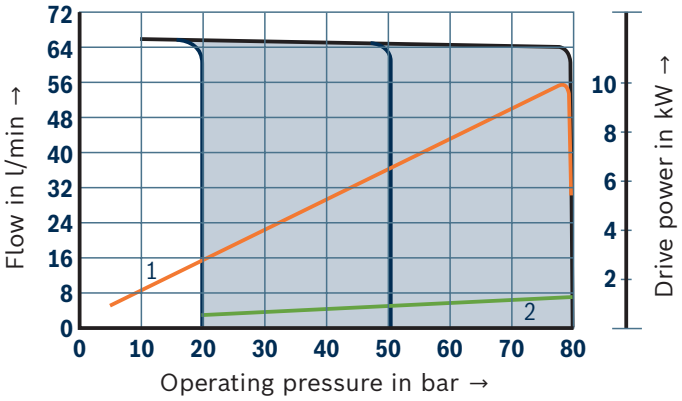

1 Displacement
2 Zero stroke

Sound pressure level

Version „25-30“

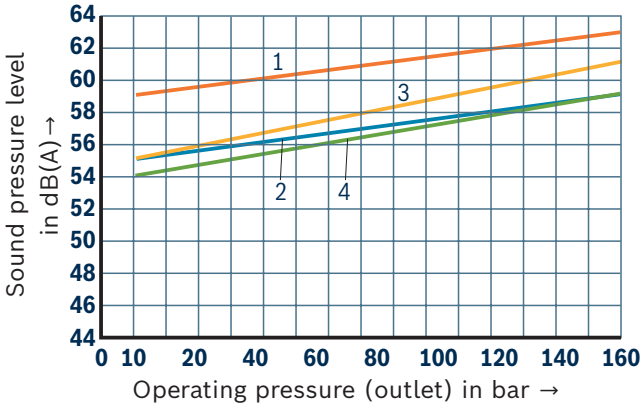

Version „25-45“

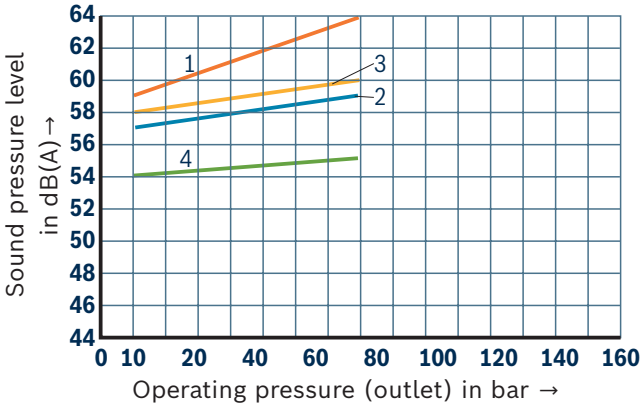

1 Displacement; 1450 rpm
2 Displacement; 900 rpm
3 Zero stroke; 1450 rpm
4 Zero stroke; 900 rpm

Notes:
- Sound pressure levels measured in acoustic room according to DIN 45635 Part 26; distance microphone – pump = 1 m
- The pump comes calibrated for optimal operating noise at the desired zero stroke pressure. If not specified, the pump comes optimized for the maximum achievable zero stroke pressure.

Dimensions
(dimensions in mm)

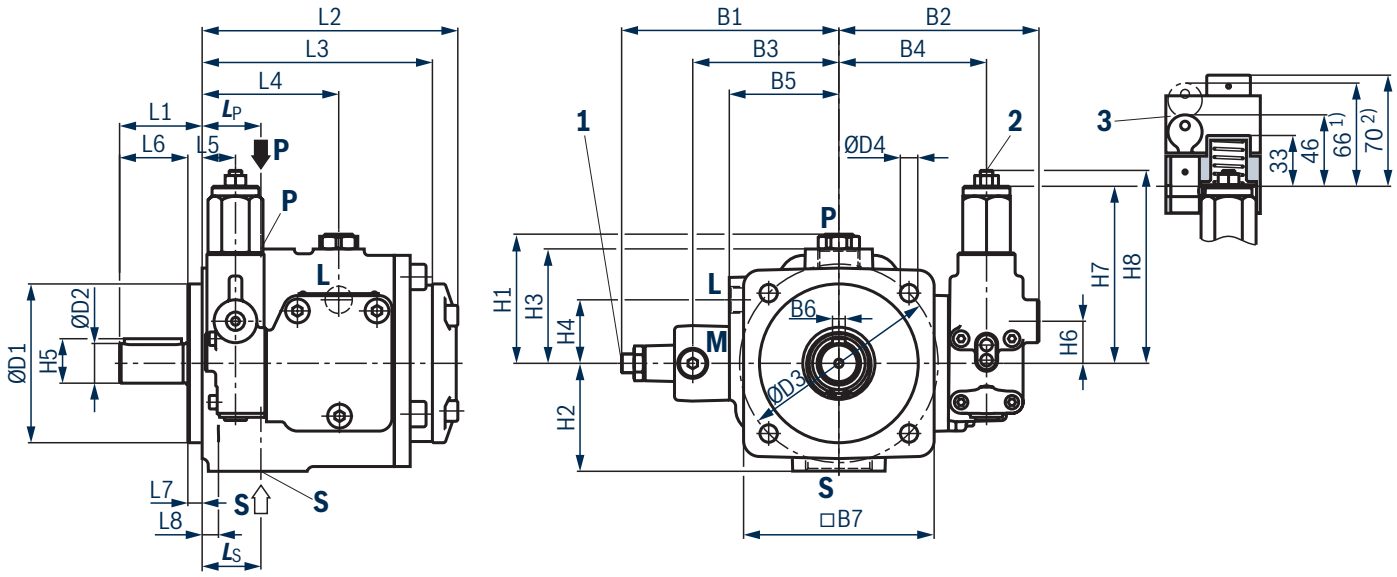

BG	L1	L2	L3	L4	L5	L6	L7	L8	L_P	L_S	L	S	ØD1	ØD2	ØD3	ØD4
10	44	142	132	78.5	22	36	7	9.3	26	26	G 1/4; 12	G 1/4; 12	80h8	20j6	103	9H13
16	52	161	145	86	21	42	9	10.3	37	37	G 3/8; 12	G 1/4; 12	100h8	25j6	125	11H13
25	52	173	157	86	21	42	9	10.3	34	38	G 3/8; 12	G 1/4; 12	100h8	25j6	125	11H13

BG	B1 [3]	B2	B3	B4	B5	B6	B7	H1 [3]	H2	H3	H4	H5	H6	H7	H8 [3]
10	134	125	88	90	65	6h9	96	76.1	58	64	37	22.5	25	110	130
16	138	128	92	93	69	8h9	120	83.6	68	72	40	28	26.5	111.5	131.5
25	144	134	98	99	75	8h9	120	93.8	92	80	40	28	26.5	111.5	131.5

1) For key removal
2) For lock cap removal
3) Maximum dimension

1 Flow control
2 Pressure adjuster
3 Space required to remove the lock cap (pressure can only be adjusted with lock cap removed)

Notes:
- Flow control (1)
  - Turning clockwise reduces flow.
  - Turning counterclockwise increases flow.
  - The set flow should not be less than 50 % of the maximum value.
- Pressure adjuster (2)
  - Turning clockwise increases operating pressure.
  - Turning counterclockwise decreases operating pressure.

Connections
(dimensions in mm)

Suction port S and **pressure port P**

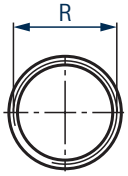

BG	Suction port S	Pressure connection P
	R	R
10	G 1; 18	G 1/2; 14
16	G 1 1/4; 20	G 3/4; 16
25	G 1 1/2; 22	G 1; 18

Pipe thread according to ISO 228-1

Dimensions: Pump combination – design „P2V7-AX...+V7-AX...“
(dimensions in mm)

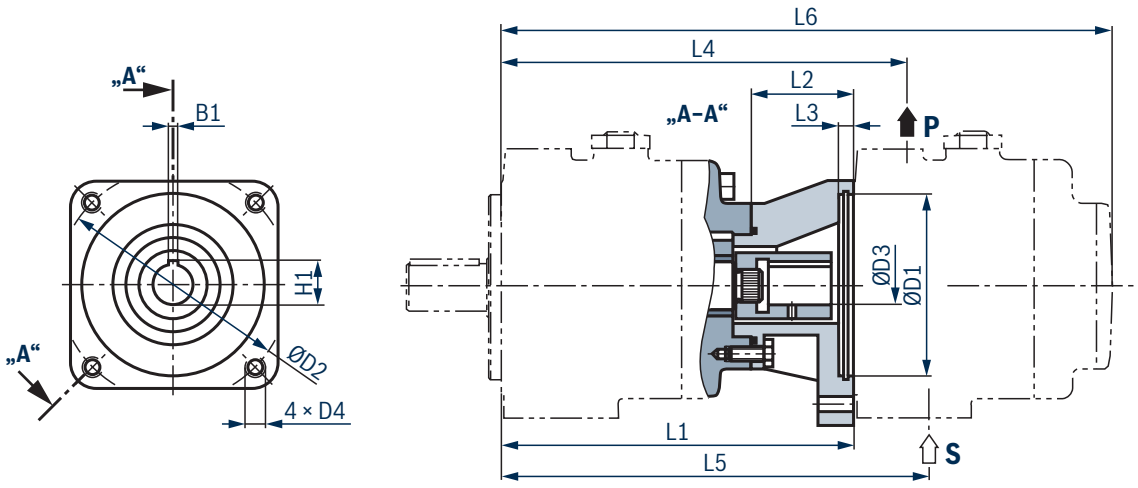

Pump 1 „P2V7-AX“ BG	Pump 2 „V7-AX“ BG	L1	L2	L3	ØD1	ØD2	ØD3	D4	H1	B1JS9	L4	L5	L6
10	**06**	182	50	8	80	103	20	M8	22.8	6	199	202.5	283
	10	182	50	8	80	103	20	M8	22.8	6	208	208	324
16	**06**	200	55	8	80	103	20	M8	22.8	6	217	220.5	301
	10	200	55	8	80	103	20	M8	22.8	6	226	226	342
	16	208	63	10	100	125	25	M10	28.3	8	245	245	369
	20	208	63	10	100	125	25	M10	28.3	8	238	233	343
	25	208	63	10	100	125	25	M10	28.3	8	242	246	381
25	**06**	212	55	8	80	103	20	M8	22.8	6	229	232.5	313
	10	212	55	8	80	103	20	M8	22.8	6	238	238	354
	16	220	63	10	100	125	25	M10	28.3	8	257	257	362
	20	220	63	10	100	125	25	M10	28.3	8	250	245	355
	25	220	63	10	100	125	25	M10	28.3	8	254	258	397

Order example

- P2V7-AX/10-14C0+V7-AX/06-14C0RE01+A01E4
- P2V7-AX/16-20C0+V7-AX/20-20C0RE01+A01E4
- P2V7-AX/10-14C0+V7-AX/10-14C0RE01+E01E4
- P2V7-AX/16-20C0+V7-AX/16-20C0RE01+E01E4
- P2V7-AX/25-30C0+V7-AX/25-30C0RE01+E01E4
- P2V7-AX/10-14C0+V7-AX/10-14C0RE01+E01E4
- P2V7-AX/16-20C0+V7-AX/16-20C0RE01+E01E4
- P2V7-AX/25-30C0+V7-AX/25-30C0RE01+E01E4

Dimensions: Pump combination – design „P2V7-AX...+GF1...“ (dimensions in mm)

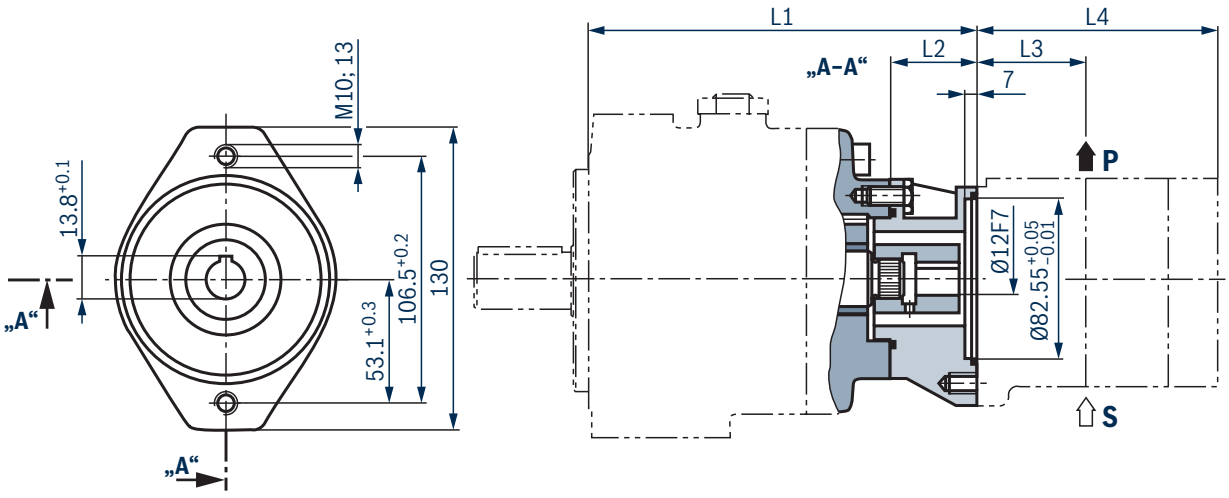

Pump 1: „P2V7-AX...“

BG	L1	L2
10	168	36
16	192	47
25	204	47

Pump 2: „GF1...“

NG	L2	L3
1.7	48.6	86
2.2	48.6	86
2.8	49.7	88.6
3.2	50.5	89.9
4.1	52.4	93.6
5.0	54.2	97.3

Order example

- P2V7-AX/10-14C0+GF1/4,1RE01+E01E4
- P2V7-AX/25-45C0+GF1/4,1RE01+E01E4

Dimensions: Pump combination – design „P2V7-AX...+GF2...“; „P2V7-AX...+GH2...“; „P2V7-AX...+GH3...“; „P2V7-AX...+AZPF...“
(dimensions in mm)

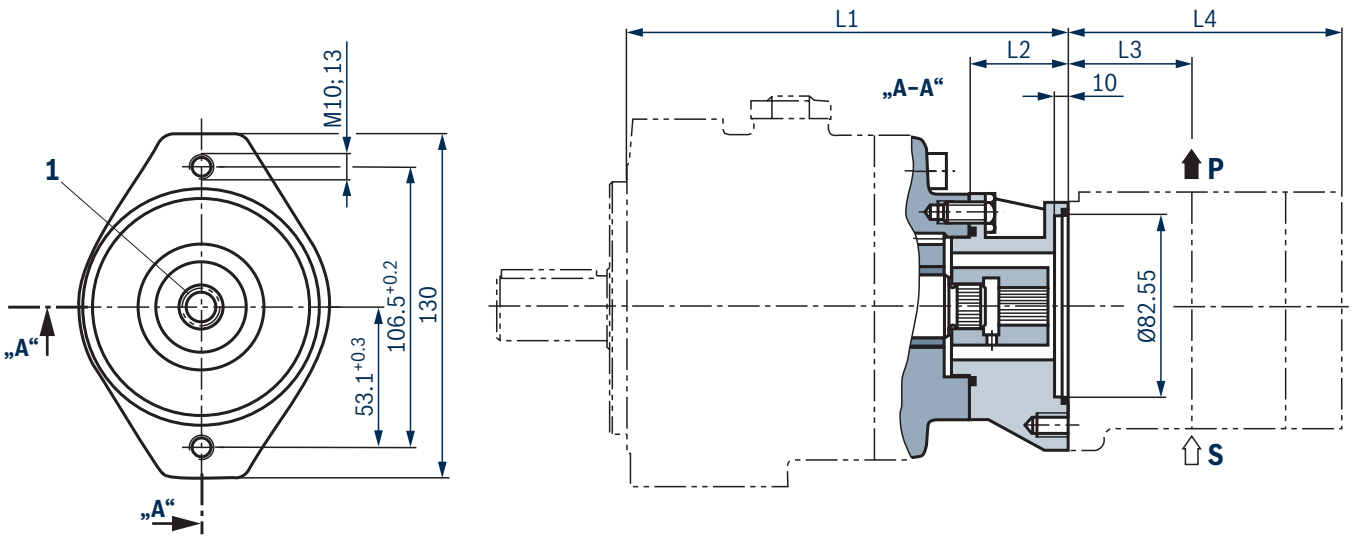

1 SAE J744 splined shaft 5/8 in ISO 3019-1 – 9T – 16/32DP

Pump 1: „P2V7-AX...“

BG	L1	L2
10	168	36
16	192	47
25	204	47

Pump 2: „PGF2“

NG	L3	L4
006	65	116
008	67	119.5
011	69.5	125
013	72	130
016	74.5	135
019	77.5	141
022	80.5	147

Order example

- P2V7-AX/10-14C0+GF2/016RE01+J20E4
- P2V7-AX/10-14C0+GH2/005RE01+R07E4
- P2V7-AX/10-14C0+GH3/013RE01+R07E4
- P2V7-AX/10-14C0+AZPF/016RE01+R20E4

Pump 2: „PGH2“

NG	L3	L4
003	51	102.5
005	54	110
006	55.5	112.5
008	57	116

Pump 2: „PGH3“

NG	L3	L4
011	60	121.5
013	62.5	126.5
016	65	131.5

Pump 2: „AZPF“

NG	L3	L4
004	40	85
005	41	87.5
008	43	91.5
011	47	96.5
014	47.5	101.5
016	47.5	105
019	47.5	110
022	55	115.5

Dimensions: Pump combination – design „P2V7-AX...+GZ4...“; „P2V7-AX...+GZ5...“ (dimensions in mm)

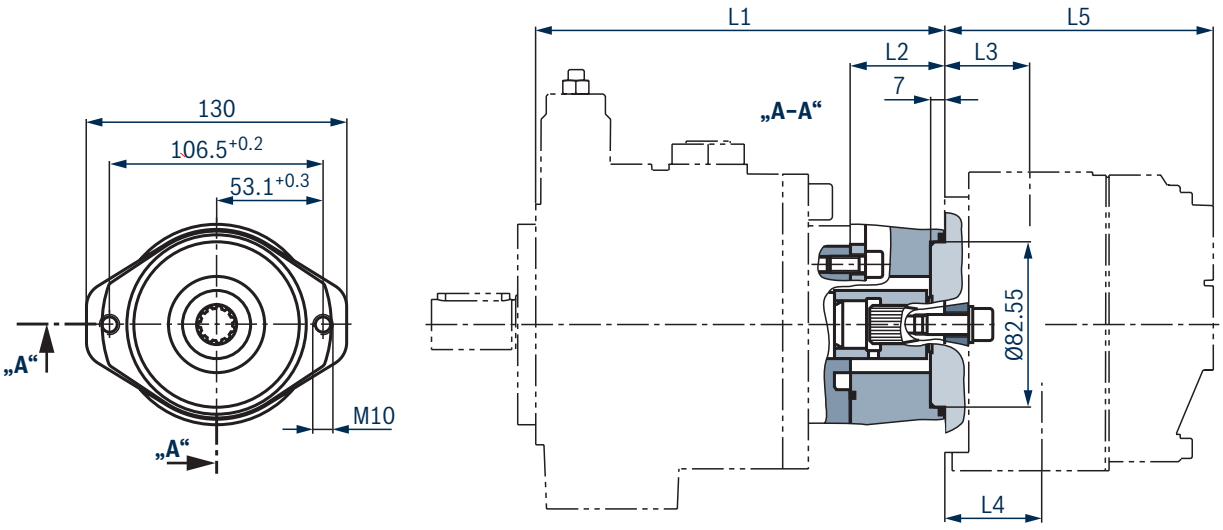

Pump 1: „P2V7-AX...“

BG	L1	L2
16	192	47
25	204	47

Pump 2: „PGZ4“

NG	L3	L4	L5
020	42.5±0.2	42.5±0.2	116.5±1.2
032	42.5±0.2	42.5±0.2	121.5±1.2
040	42.5±0.2	42.5±0.2	125±1.2
050	42.5±0.2	42.5±0.2	129±1.2
063	42.5±0.2	42.5±0.2	134±1.2
080	42.5±0.2	42.5±0.2	142±1.2

Pump 2: „PGZ5“

NG	L3	L4	L5
063	42.5±0.2	48.5±0.2	134±1.2
080	42.5±0.2	48.5±0.2	142±1.2
100	42.5±0.2	48.5±0.2	150.5±1.2
140	42.5±0.2	48.5±0.2	163±1.2

Order example

- P2V7-AX/16-20C0+GZ4/032RE01+T07E4
- P2V7-AX/25-30C0+GZ5/080RE01+T07E4

Dimensions: Pump combination – design „P2V7-AX...+PR4-1X...“ (dimensions in mm)

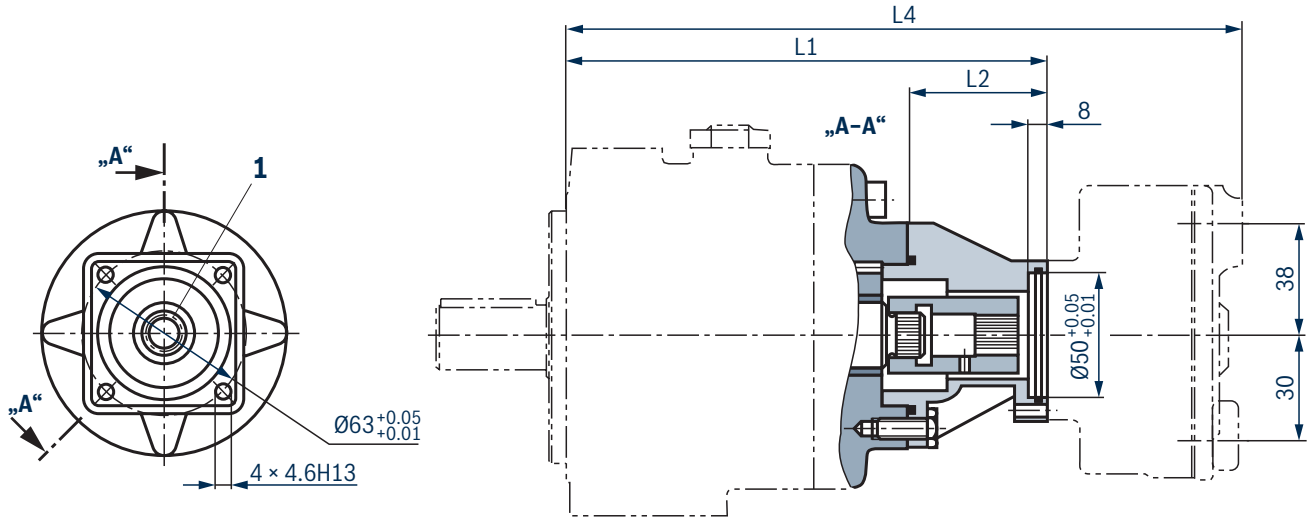

1 10×12 serration DIN 5481

Pump 1: „P2V7-AX...“

BG	L1	L2	L3
16	208	63	277
25	220	63	289

Order example

- P2V7-AX/16-20C0+R4/1,00-450RE01+G01E4

☞ **Notice:**
Suction port S on Type PR4 should be above the pressure port.

Dimensions: Pump combination – design „P2V7-AX...+PR4-3X...“ (dimensions in mm)

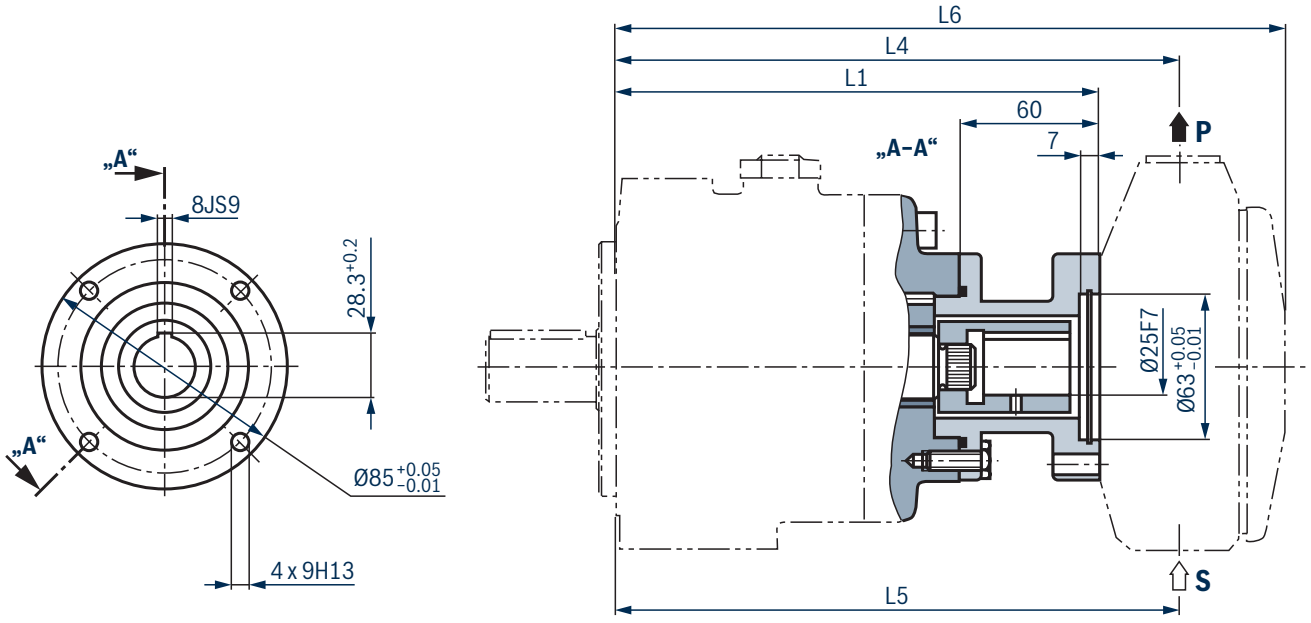

Pump 1: „P2V7-AX...“

BG	L1	L4		L5		L6	
		3/5 pistons	10 pistons	3/5 pistons	10 pistons	3/5 pistons	10 pistons
16	205	243.5	243.5	243.5	252.5	291	324.5
25	217	255.5	255.5	255.5	264.5	303	336.5

Order example

▶ P2V7-AX/16-20C0+R4/3,15-500RE01+A01E4

Dynamic pressure control characteristics, measurement set-up

The control times apply to the measurement set-up shown. For other set-ups and line lengths, the control times will change.

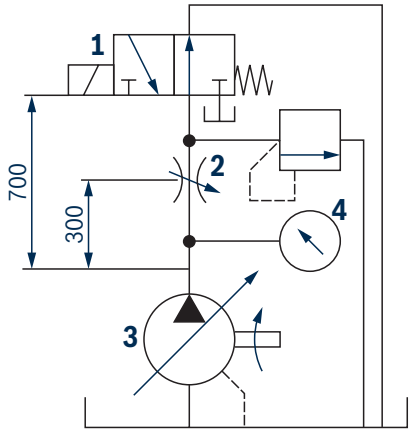

1 Directional valve (switching time 30 ms)
2 Throttle for setting pressure during displacement
3 Hydraulic pump
4 Pressure tapping point

Pressure relief
q_V displacement → q_V zero stroke

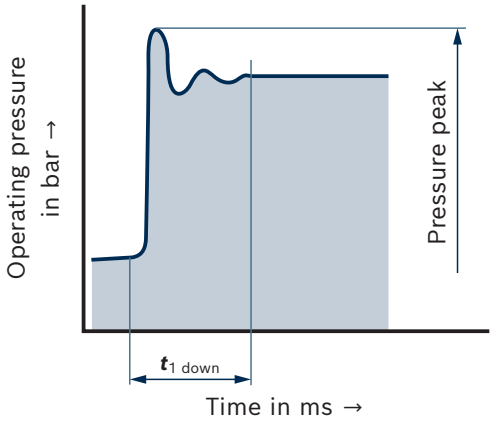

Pressure recovery
q_V zero stroke → q_V displacement

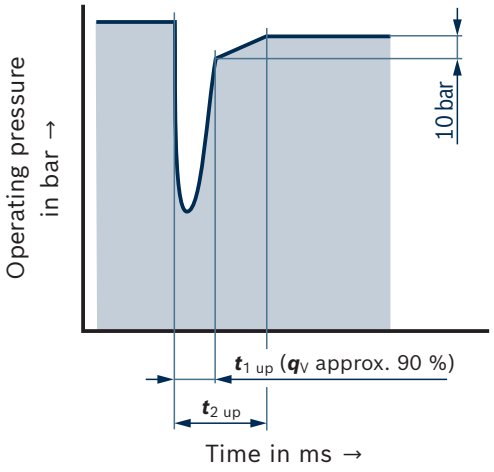

Version	**Control down times** in ms (average)					
	20 ... 160 bar		20 ... 80 bar		20 ... 40 bar	
	t_{down}	p_{max} [1)]	t_{down}	p_{max} [1)]	t_{down}	p_{max} [1)]
„10-14“	100	180	–	–	150	80
„10-20“	–	–	100	130	150	100
„16-20“	100	200	–	–	120	100
„16-30“	–	–	100	140	150	110
„25-30“	100	220	–	–	120	120
„25-45“	–	–	100	150	120	120
„40-45“	100	240	–	–	120	140

Version	**Control up times** in ms (average)					
	160 ... 130 bar		80 ... 60 bar		40 ... 30 bar	
	$t_{1\ up}$	$t_{2\ up}$	$t_{1\ up}$	$t_{2\ up}$	$t_{1\ up}$	$t_{2\ up}$
„10-14“	60	80	–	–	60	80
„10-20“	–	–	60	80	50	100
„16-20“	50	80	–	–	50	90
„16-30“	–	–	50	80	50	100
„25-30“	80	100	–	–	70	100
„25-45“	–	–	80	100	80	130
„40-45“	70	100	–	–	60	100

[1)] Permissible pressure peaks

Controller

Pressure controller „C“

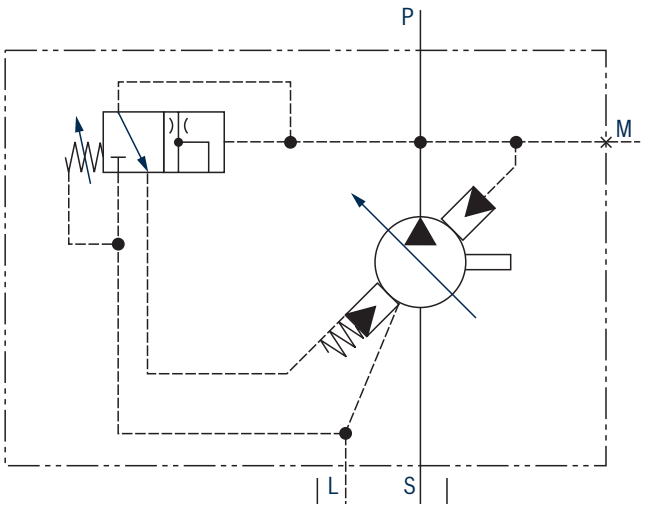

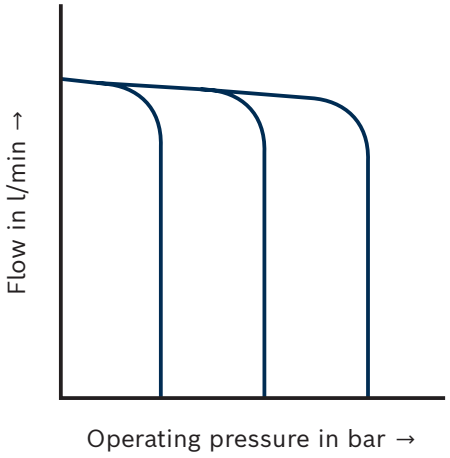

P Pressure port
S Suction port
L Drain port
S Measuring port (plugged)

Order example

- PV7-AX/10-20RE01MC0-10
- PV7-AX/16-20RE01MC0-16

Project planning information

When using vane pumps, we recommend carefully observing the notes below.
Project planning, installation and commissioning of the vane pumps require skilled persons with training.

Technical data
All characteristics are based on manufacturing tolerances and apply under specific boundary conditions.
Please note that this means certain deviations are possible and characteristics may vary when boundary conditions (e.g. viscosity) change.

Characteristic curves for flow and power input
When designing the drive motor, observe the maximum possible application parameters.

Noise
The values for sound pressure level shown on the pages 9 ... 11 have been measured according to DIN 45635 part 26. That means only the noise emission of the pump is shown. Environmental influences (such as place of installation, piping, etc.) have been eliminated. The values are in each case only valid for one pump.

☞ **Notice:**
Due to the power unit design and influences at the final place of installation of the pump, the sound pressure level is usually 5 ... 10 dB(A) higher than the level from the pump itself.

Leakage
The "Technical Data" section states the average external leakage of the pumps. Note that these values are only intended to serve as project planning guidelines for determining cooler sizes and line cross-sections.
The zero stroke power is the relevant factor for dimensioning the reservoir (see pages 9 ... 11).
Cross section narrowing and the use of a leakage cooler can cause unacceptably high pressure peaks in the leakage line.

Leakage cooler
The values for external leakage (page 8) are averages for continuous operation.
When the pump relieves pressure, the leakage flow is increased momentarily by the pilot fluid of the controller. Cross section narrowing, long drain lines and leakage coolers can cause unacceptably high pressure peaks. Appropriate steps, e.g., a check valve in the bypass, should be taken to prevent the leakage pressure (pmax = 2 bar) from exceeding permissible limits. Otherwise there is a risk the shaft seal will be damaged.

Pressure limitation
Depending on the controller version, the vane pump type PV7 contains no internal mechanism for limiting potential peaks in operating pressure. Setting and limiting the admissible operating pressure has to be ensured on the system side. The pressure relief valves necessary for that purpose are to be designed considering the maximum flow and the existing pressure increase speed so that the admissible intermittent operating pressure is not exceeded.

Project planning information

Multiple pumps

Pumps type PV7 are designed to be combinable. Every pump comes with a geared through-drive.

- When operating the PV7 as a displacement pump, it should be used as the downstream pump.
- The same general technical data for single pumps applies (see page 8).
- The pump under greater load (pressure × flow) should be the first pump stage.
- When combining multiple pumps, the torque generated may reach unacceptable levels. The sum of the torque levels should not exceed the permissible values (see table).
- Combination parts must be listed as separate items when ordering.
- The combination parts come with the necessary seals and screws.

- Single pump

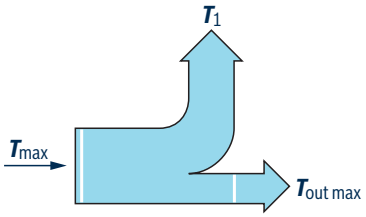

BG	Maximum permissible drive torque T_{max}	Maximum permissible output torque $T_{out\ max}$
10	90	45
16	140	70
25	180	90

- Combination pump

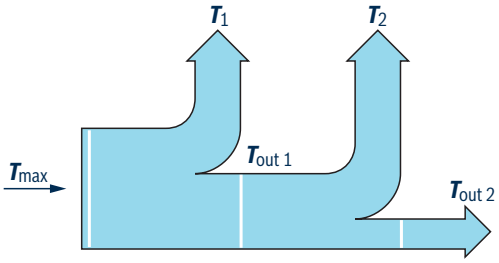

Pump combination „P2V7-AX/25-30...+V7/25-30“
Desired maximum pressure p_n = 160 bar

Torque (input shaft) formula

$$T = \frac{\Delta p \times V \times 0.0159}{\eta_{hydr.\text{-}mech.}}$$

T	Torque in Nm
Δp	Operating pressure in bar
V	Displacement in cm³
η	Hydraulic mechanical efficiency

Calculation example

$$T_{1,\,2} = \frac{160 \times 30 \times 0.0159}{0.85}$$

$T_{1,2}$ = 90 Nm ≤ $T_{out\ max}$
T = T1+T2 = 180 Nm ≤ T_{max}

Notice
The pump combination can be operated with the calculated parameters.

Installation information

Fluid tank

- Adjust useful volume of the tank to the operating conditions.
- The admissible fluid temperature must not be exceeded; include a cooler, if necessary.

Lines and connections

- Cut at a 45° angle.
- Remove protective plugs from the pump.
- We recommend using seamless precision steel pipes according to EN 10305-1 and releasable pipe connections.
- Select the inner width of the pipes according to the connections.
- Thoroughly clean pipelines and fittings prior to installing.

Suggested pipe routing

(Minimum dimensions in mm)

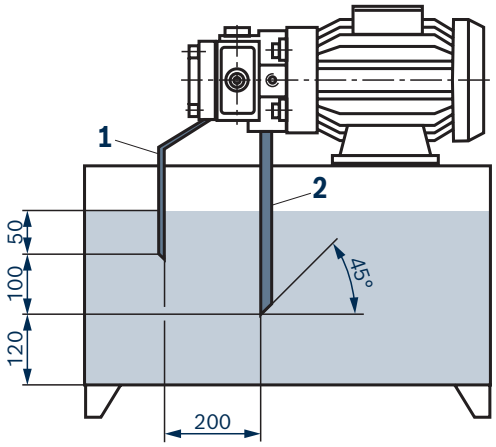

1 Leakage line

2 Suction line

- Place the leakage line so the pump cannot run dry.
- Under no circumstances should the leakage and return fluid be directly suctioned back into the pump.

Filter

Use a return flow or pressure filter, if possible.
(Use suction filters only in combination with a ported vacuum switch / clogging indicator).

Hydraulic fluid

- Please observe our regulations according to data sheet 90220.
- We recommend brand hydraulic fluids.
- Do not mix different types of hydraulic fluids, since this can result in decomposition and deterioration of lubricity.

Hydraulic fluid should be replaced at regular intervals according to the operating conditions. Residue should also be cleaned from the hydraulic fluid reservoir at this time.

Drive

Electric motor + pump carrier + coupling + pump

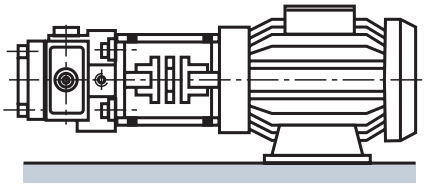

- No radial or axial forces permissible on the pump drive shaft.
- Motor and pump must be exactly aligned!
- Use a torsionally flexible coupling.

Installation position

- Horizontal, suction port facing downwards preferred
- Vertical, upwards shaft when installed in tank

Commissioning information

Bleeding

- All vane pumps of type PV7...AX are self-priming.
- Before initial commissioning, the pump must be air bled to protect it against damage.
- For the initial commissioning, we recommend filling the housing via the leakage line. Note the filter rating. This increases operating safety and prevents wear in case of unfavorable installation conditions.
- If the pump does not deliver medium without bubbles after approx. 20 seconds, the system must be checked once again. After the operating level has been reached, check the pipe connections for leak-tightness. Check the operating temperature.

Commissioning

- Check whether the system is thoroughly and properly installed.
- Observe the arrows indicating the direction of rotation of the motor and the pump.
- Start up the pump without load and allow to pump at zero pressure for some seconds in order to allow for sufficient lubrication.
- Never operate the pump without hydraulic fluid.

☞ **Notes:**

- The pump should only be adjusted, maintained and repaired by authorized, trained and instructed staff.
- Only use original Rexroth spare parts.
- Only operate the pump within the admissible tolerances.
- Only operate the pump when in good working order.
- Before working on the pump (e.g. installation/ removal), de-energize and depressurize the system.
- Unauthorized modifications or changes which impair the safety and function are inadmissible!
- Install protective devices (e.g. coupling guard).
- Existing protective devices must not be removed.
- Always observe General safety and accident prevention regulations.

Further information

▶ Hydraulic fluids based on mineral oils	Data sheet 90220
▶ Information on available spares	www.boschrexroth.com/spc

Bosch Rexroth AG
Industrial Hydraulics
Zum Eisengießer 1
97816 Lohr am Main, Germany
Phone +49 (0) 93 52 / 40 30 20
my.support@boschrexroth.com
www.boschrexroth.com

© All rights reserved to Bosch Rexroth AG, also regarding any disposal, exploitation, reproduction, editing, distribution, as well as in the event of applications for industrial property rights.
The data specified above only serve to describe the product. As our products are constantly being further developed, no statements concerning a certain condition or suitability for a certain application can be derived from our information. The information given does not release the user from the obligation of own judgment and verification. It must be remembered that our products are subject to a natural process of wear and aging.